R. J. GATLING.

Hemp and Flax Brake.

No. 5,073. Patented April 17, 1847.

Fig. 5.



Fig. 1

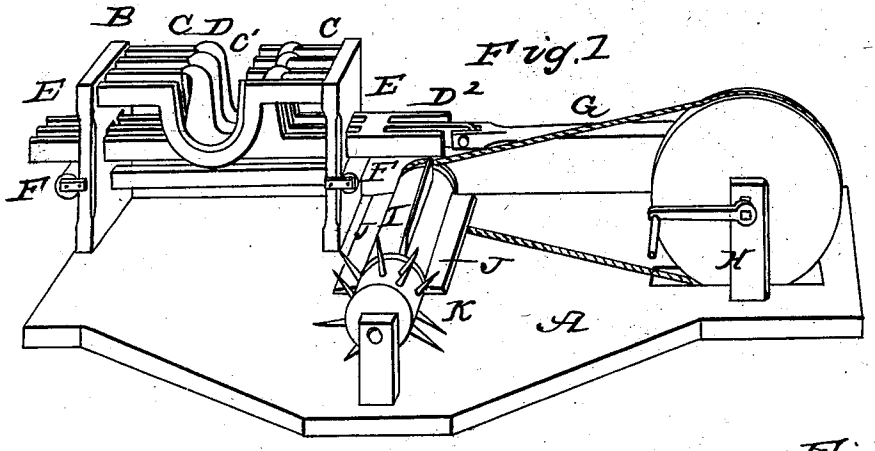

Fig. 2

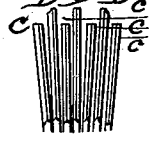

Fig. 3

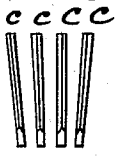

Fig. 4

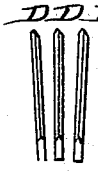

N. PETERS. Photo-Lithographer. Washington, D. C.

UNITED STATES PATENT OFFICE.

RICHD. I. GATLING, OF MURFREESBOROUGH, NORTH CAROLINA.

IMPROVEMENT IN HEMP-BRAKES.

Specification forming part of Letters Patent No. **5,073**, dated April 17, 1847.

To all whom it may concern:

Be it known that I, RICHARD I. GATLING, of the town of Murfreesborough, in the county of Hertford and State of North Carolina, have invented a new and useful Improvement in the Machine for Breaking Hemp and Flax called "Gatling's Double-Acting Hemp and Flax Brake," which is described as follows, reference being had to the annexed drawings of the same, making part of this specification.

Figure 1 is a perspective view of the machine when in operation. Fig. 2 is a vertical transverse section of the stationary and movable racks or breakers arranged the one within the other. Fig. 3 is a vertical transverse section of the stationary rack or breaker detached. Fig. 4 is a vertical transverse section of the movable breaker detached from the stationary breaker. Fig. 5 is a longitudinal elevation of one of the movable beaters detached from the machine.

The nature of my invention and improvement consists in arranging in parallel lines two, three, six, nine, or more cast-iron or wrought-iron plates, one half of said plates being stationary and one half movable, the former being secured in a permanent frame, and the latter being attached by a stock and connecting-rod to a revolving crank of a horizontal or other shaft, and caused to move back and forth between the stationary plates, which are arranged with their lower edges nearer together than their upper edges for the purpose of breaking the hemp finer as it descends in semi-circular, semi-oval, or U-shaped, or other shaped spaces, notches, or cavities, or depressions made in the upper edges of the said stationary and movable plates, said notches or depressions being all in a straight line transversely when the machine is at rest, forming a transverse semi-oval, semicircular, or rectangular rack with longitudinal spaces between the plates composing said racks that gradually decrease in width from the upper to the under side for the purpose of breaking the hemp in finer breaks as it descends through the semi-oval rack or square space. The bundle of unbroken hemp to be operated on being laid transversely in the said semi-oval rack at the upper or wider portion thereof, and the crank-shaft turned a semi-revolution, will cause the movable rack to carry the hemp against one side of the stationary rack, where the plates composing it are wider apart and where the hemp will be broken coarsely, which is necessary at the commencement of the breaking operation, and then by turning the crank-shaft another half-revolution the motion of the sliding breakers will carry the hemp to the opposite side of the stationary rack and break it in an opposite direction, and by repeating the operation by a continuous revolving motion of the crank-shaft and a simultaneous descent of the hemp it will be broken effectually to the degree of fineness required, the attendant having only to hold the bundle of hemp in the semi-oval spaces of the sliding breakers and change the position of the same horizontally and transversely and vertically during the movement back and forth of the breakers, when it will be seen that the hemp will receive two breaks at each revolution of the crank, and that the machine can be operated with very little power, particularly when anti-friction rollers are placed under the sliding plates for them to move over, as represented at F, Fig. 1, in the drawings. The hemp is then turned over to a set of revolving beaters, which knock off the broken hurds, and then applied to a series of revolving teeth, which hackle it, said beaters and teeth being fixed in the convex surface of a revolving cylinder turned by an endless band connected to the revolving crank-shaft or fly-wheel.

In the several figures of the drawings similar letters refer to corresponding parts.

A is the base or foundation of the machine made of any suitable material, shape, and proportion.

B are two uprights for sustaining the beaters, which uprights are let into the foundation, the plates composing the stationary beaters being fixed in the said uprights.

C are the stationary beaters, C′ being the semi-oval depressions or cavities in the same, before mentioned.

D are the sliding beaters for breaking the hemp against the stationary beaters, D′ being the semi-oval-shaped spaces in the same for the reception of the hemp to be broken.

D^2 is the stock for connecting together the plates composing the movable beaters.

E are the oblong spaces made in the vertical plates or posts that support the stationary

beaters, through which the sliding beaters move back and forth.

F are anti-friction rollers, over which the sliding beaters move back and forth.

G is the connecting-rod for connecting the sliding beaters to the revolving crank-shaft.

H are posts for sustaining the boxes in which the axle or crank-shaft revolves.

I is the revolving cylinder, in which are inserted the beaters for separating the broken hurds from the hemp, and the teeth for hackling the hemp.

J are the beaters, and K are the teeth.

The machine may be composed of wood or iron, or any suitable material, of an oblong or any other required form and varied in its dimensions, and be placed vertical or horizontal or inclined or in any more convenient position, and be propelled by any convenient power.

The concave edges of the beaters may be made smooth or notched, as preferred.

The beaters may be arranged the one a little in advance of the next succeeding one, so that they may not all strike the hemp at the same time, by which the resistance will be reduced.

What I claim, and desire to secure by Letters Patent, is—

The combination of the open-bow or U-shaped sliding beaters or breakers D with the stationary beaters C, constructed, arranged, and operated in the manner and for the purpose above set forth, the space in which the flax or hemp is broken being open at top and gradually lessening in size longitudinally and transversely as it descends for the purpose of breaking the hemp or flax finer as it is suffered to descend by the operator.

R. I. GATLING.

Witnesses:
EMORY HOUGHTON,
A. E. H. JOHNSON.