(No Model.) 3 Sheets—Sheet 1.

R. J. GATLING.

MACHINE GUN.

No. 502,185. Patented July 25, 1893.

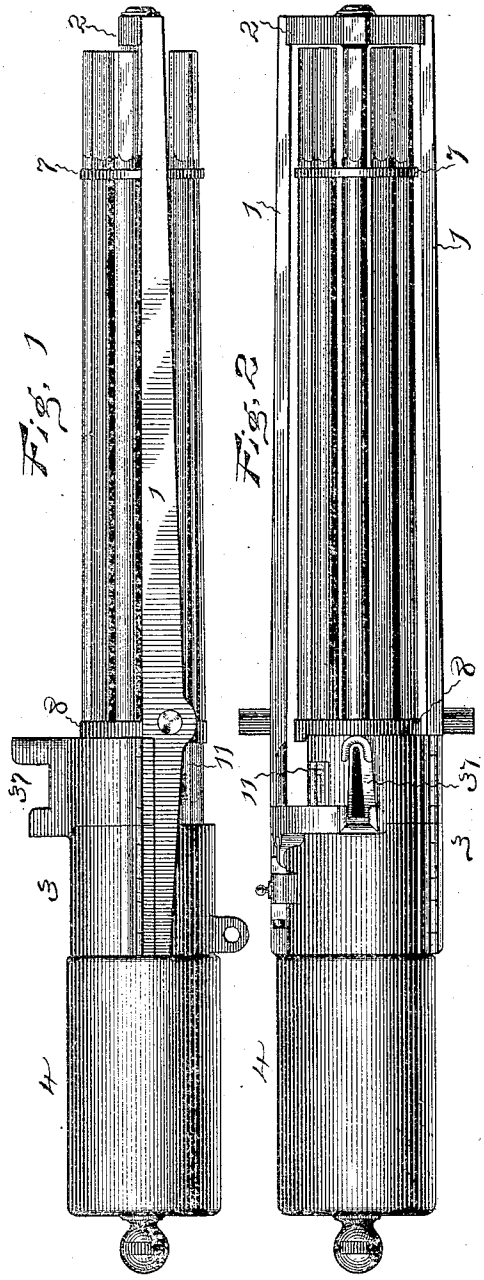

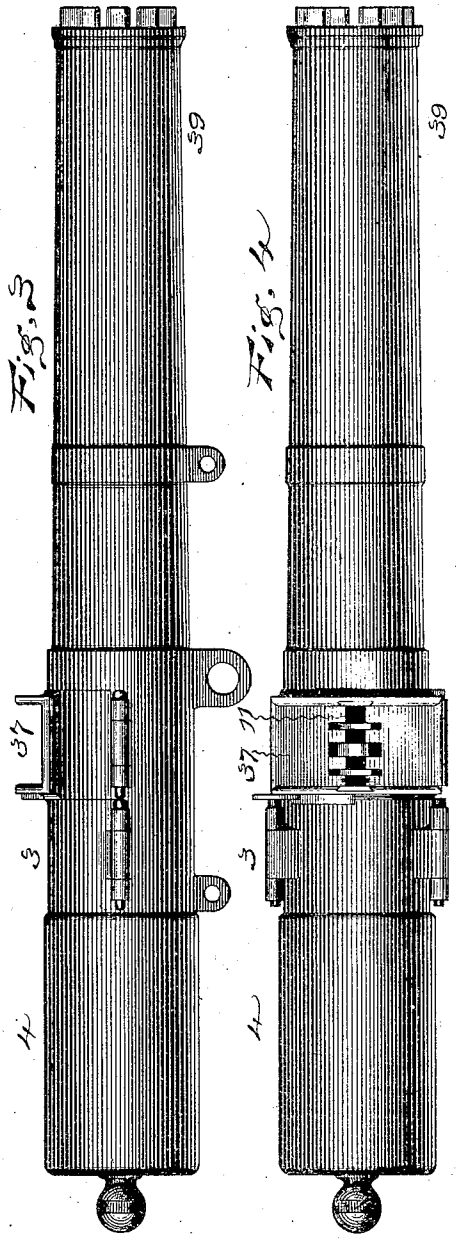

Witnesses:
Clarence E. Ricklaus.
P. A. Phelps.

Inventor:
Richard J. Gatling by,
Harry P. Williams.
Atty.

(No Model.) 3 Sheets—Sheet 2.

R. J. GATLING.

MACHINE GUN.

No. 502,185. Patented July 25, 1893.

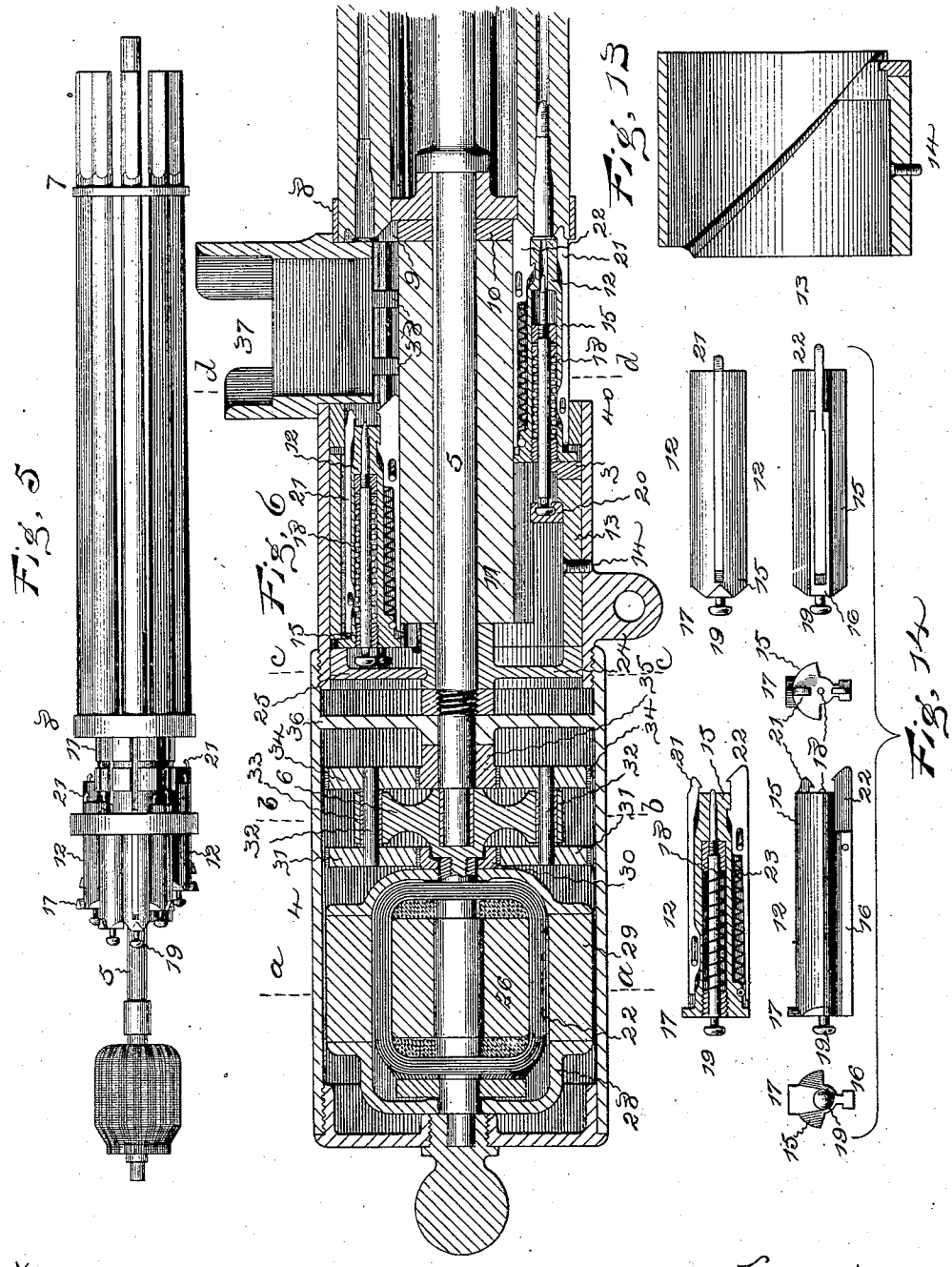

Witnesses:
Clarence E. Buckland.
P. A. Phelps.

Inventor:
Richard J. Gatling by
Henry P. Williamson
Atty.

(No Model.) 3 Sheets—Sheet 3.

R. J. GATLING.

MACHINE GUN.

No. 502,185. Patented July 25, 1893.

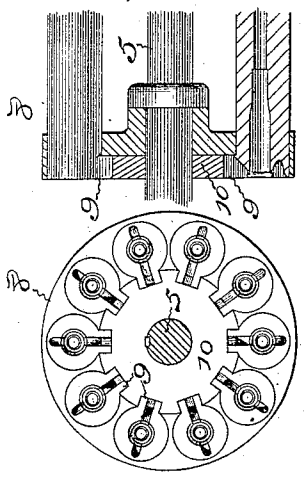

Fig. 12

Fig. 11

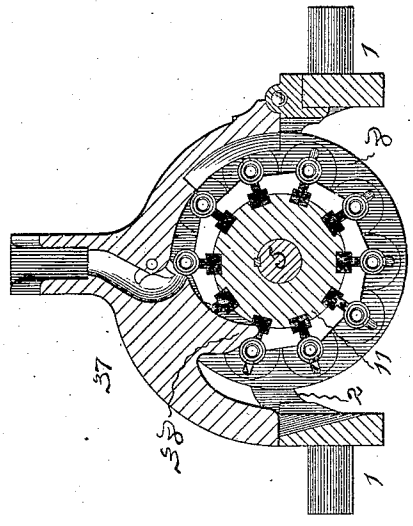

Fig. 10

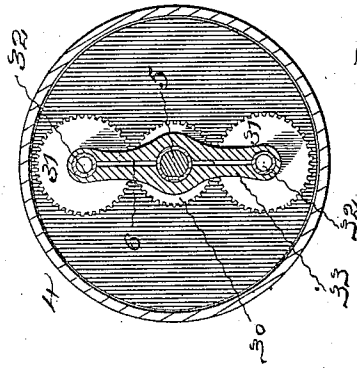

Fig. 8

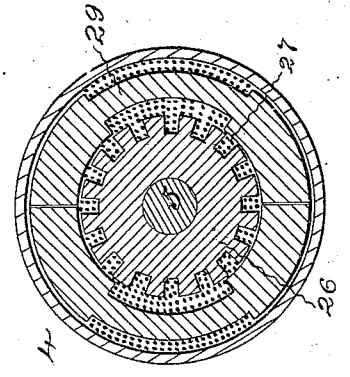

Fig. 7

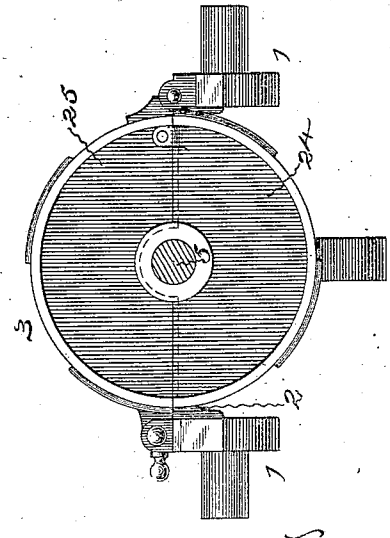

Fig. 9

Witnesses:
Clarence E. Buckland.
P. A. Phelps.

Inventor:
Richard J. Gatling, by
Henry P. Williamson
atty.

UNITED STATES PATENT OFFICE.

RICHARD J. GATLING, OF HARTFORD, CONNECTICUT.

MACHINE-GUN.

SPECIFICATION forming part of Letters Patent No. 502,185, dated July 25, 1893.

Application filed September 10, 1892. Serial No. 445,492. (No model.)

To all whom it may concern:

Be it known that I, RICHARD J. GATLING, a citizen of the United States, residing at Hartford, in the county of Hartford and State of Connecticut, have invented certain new and useful Improvements in Machine-Guns, of which the following is a full, clear, and exact specification.

The invention relates to the class of machine guns commonly known as Gatling guns, the object being to provide a gun of this class which can be readily changed so as to be fired with great rapidity either by hand or by power, the power driving mechanism being so constructed that it may be quickly removed, or attached in such manner that it is out of sight and not a mark for hostile projectiles or in the way of the gunners; and further to so construct the mechanism of the gun that the parts may be quickly removed and assembled, and enable cartridges of small caliber to be used and positively extracted after being fired.

To this end the invention resides in a gun having a frame or casing supporting a cylindrical cam and a central revolving shaft bearing coils of wire, a group of barrels and a cylinder with reciprocating locks, and in details of the construction of these parts, as more particularly hereinafter described and pointed out in the claims.

Referring to the accompanying drawings:—Figure 1 is a side view of one of these guns of the class known as the "army gun." Fig. 2 is a plan of the same. Fig. 3 is a side view of one of these guns of the class known as the "navy gun." Fig. 4 is a plan of this latter gun. Fig. 5 is a plan of the revolving parts of one of the guns. Fig. 6 is an enlarged central longitudinal vertical section of the butt of the gun shown in Fig. 1. Fig. 7 is a section on plane denoted by the broken line *a a*. Fig. 8 is a section on plane denoted by *b b*. Fig. 9 is a section on plane *c c*. Fig. 10 is a section on *d d*. Fig. 11 is a view of the breech of the barrels and their holder. Fig. 12 is a section of a portion of the same. Fig. 13 is a section of the cam cylinder; and Fig. 14 shows top, bottom, side, sectional and end views of one of the locks.

In the views 1 indicates the trunnion frame which consists of a pair of metallic bars connected together at their front ends by a cross-piece 2, and at their rear ends by the casing 3. This cylindrical casing 3 is divided diametrically and the upper part hinged to the lower so that it may be thrown open to expose the interior when its catch is released and the casing 4, that is screwed upon a mutilated thread on the end of this casing, is removed. A shaft 5 passing through the center from end to end of the gun is supported at the front by the cross-piece of the frame and at the rear end by the cascabel plate or a bearing in the cascabel. It is preferred that this shaft be formed in two sections joined back of the casing 3 by means of a coupling 6 so that the rear portion of the shaft may be separated from the forward portion and removed. Keyed to the shaft are the barrel disks, the front disk, 7, being perforated and holding the barrels near their muzzles, while the rear disk, 8, is perforated and holds the butts of the barrels which are provided with lugs 9. The disk 8 is chambered and in the chamber is placed a disk 10 of hard steel, having a number of mortises in its periphery to receive and hold the lugs projecting from the ends of the barrels, so that the barrels are prevented from twisting or turning under the strain of the bullets as they pass through the rifling. The lock carrier cylinder 11 is keyed to the shaft directly back of this disk 10 so as to hold the disk is place, and in grooves in this cylinder slide the locks 12 as they are reciprocated by the cam cut in the interior of the cylinder 13 that fits into the casing 3 which has a socket to receive a pin 14 that projects from the cylinder so as to insure the correct location of the parts.

Each of the locks 12 consists of a block 15 which forms a breech block, having a tongue 16 that runs in a groove in the carrier block and a lug 17 that fits the cam groove so that the locks are reciprocated by the cam as the carrier revolves with the locks as in the common Gatling gun. In a central perforation through each lock-block is placed a spring firing pin 18 having a head 19 adapted to engage the cocking switch 20 located on the interior of the cam cylinder back of the recoil block 40, as in the common construction, while in a longitudinal mortise in the top of the block is an extractor 21, having a hooked forward end adapted to engage the upper portion of the rim of a cartridge, and in a mortise in the bottom of this block is an ex-

tractor 22 having a hooked end adapted to engage the lower part of the rim of the cartridge to withdraw it from the barrel after it has been fired. The extractor 21 is formed of a piece of spring steel, and has a small reciprocation in the mortise on its holding pin, while the extractor 22 has a longitudinal movement on its holding pin, and is thrust forward by means of the spring 23, the elastic tail of this extractor riding on a roll in the bottom of the mortise.

A diaphragm 24 with a bearing for the center shaft is located in the rear of the casing 3 behind the cam cylinder, and this diaphragm is divided, the upper part 25 being hinged to the lower so that it may be lifted when the top of the casing is lifted, to allow a free removal of the locks from the grooves in the carrier block.

In the construction shown, to the central shaft 5 is keyed a core 26 of magnetic material with a common winding of wire 27 forming an armature of an electric motor which when electrically excited rotates the shaft, while loosely mounted upon the shaft is a frame 28 which bears an electro field magnet 29. To the frame 28 of this field magnet is secured a gear 30 that meshes into gears 31 secured to shafts 32 which are journaled in the ends of a coupling 33 and which bear gears 34 in mesh with a gear 35 secured to a diaphragm 36 extending across the forward end of this casing. The coupling 33 is removably secured to the end of the shaft of the gun where the usual crank-handle would be attached, and also to the extension of the shaft which bears the armature of the electric motor.

The field magnet is wound in the customary manner and connected with its source of excitation in any common manner, and the armature is also wound as usual and connected in the ordinary way with any suitable source of electrical supply.

To start the gun into action the motor is excited by a current of electricity. The construction and arrangement described are such that the armature revolves in one direction, and being connected with the main shaft revolves it and operates the gun, while through the medium of the intermeshing gears the field revolves in an opposite direction in order that the revolutions of the armature may be slower so that the speed of the firing may be better regulated.

At the forward end of the casing 3 in the frame of the gun shown and described in Figs. 1 and 2, a hopper 37 made of a form to receive a cartridge feed slide of the class known as the "Bruce feed," is hinged to the frame on one side and provided with a catch on the opposite side to permit of its being opened or closed. Formed on or secured to the under side of this hopper are the plows 38 (Figs. 6 and 10) which extend into the path of the exploded cartridge shells after they have been extracted from the barrels, to eject them from the gun, as in the Gatling gun in common use.

In the form of gun shown in Figs. 3 and 4, the barrels are surrounded by a shell 39 for nearly their entire length, and in this shell water or any suitable cooling liquid may be placed to keep down the temperature of the barrels. In this form the upper part of the rear end of the casing and the hopper are hinged to a portion of the shell, the hopper shown in this connection being that of common form which is designed to receive the ordinary "drum feed" used with guns of this class.

I claim as my invention—

1. In combination with the frame of a machine gun, a revolving shaft bearing an armature a group of barrels and a mortised cylinder holding reciprocating locks, a casing inclosing a field magnet adjacent to the armature, and a cylindrical cam in the path of the locks, substantially as specified.

2. In combination with the frame of a machine gun, a revolving shaft bearing an armature a group of barrels and a mortised cylinder holding reciprocating locks, a casing supporting a cylindrical cam in the path of the locks, and a casing detachably secured to the former casing and inclosing a field magnet adjacent to the armature, substantially as specified.

3. In combination with the frame of a machine gun, a revolving shaft bearing a group of barrels and a mortised cylinder holding reciprocating locks, a sectional hinged casing supporting a cylindrical cam in the path of the locks, a hopper hinged to the frame adjacent to the breech of the barrels, and means for revolving the shaft, substantially as specified.

4. In combination with the frame of a machine gun, a revolving shaft bearing a group of barrels and a mortised cylinder holding reciprocating locks, a sectional hinged casing supporting a cylindrical-cam in the path of the locks, a sectional hinged diaphragm at the rear of said casing, a hopper hinged to the frame adjacent to the breech of the barrels, and means for revolving the shaft, substantially as specified.

5. In combination with the frame of a machine gun, a revolving shaft bearing a mortised cylinder holding reciprocating locks, and disks holding a group of barrels, the rear one of said disks being formed of a portion with circular perforations and a portion of harder metal having mortises adjacent to the circular perforations, barrels with lugs projecting from their rear ends into said mortises, a casing supporting a cylindrical cam in the path of the locks, and means for revolving the shaft, substantially as specified.

RICHARD J. GATLING.

Witnesses:
H. R. WILLIAMS,
CLARENCE E. BUCKLAND.