R. J. Gatling Sheet 1. 2 Sheets.

Machine Gun.

No. 47631. Patented May 9. 1865

Fig. 1.

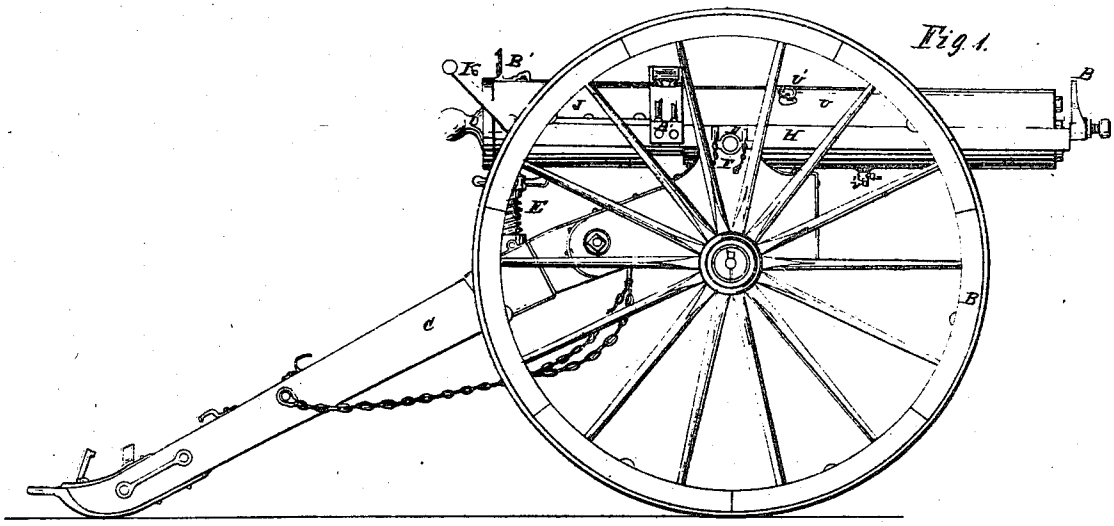

Fig. 2.

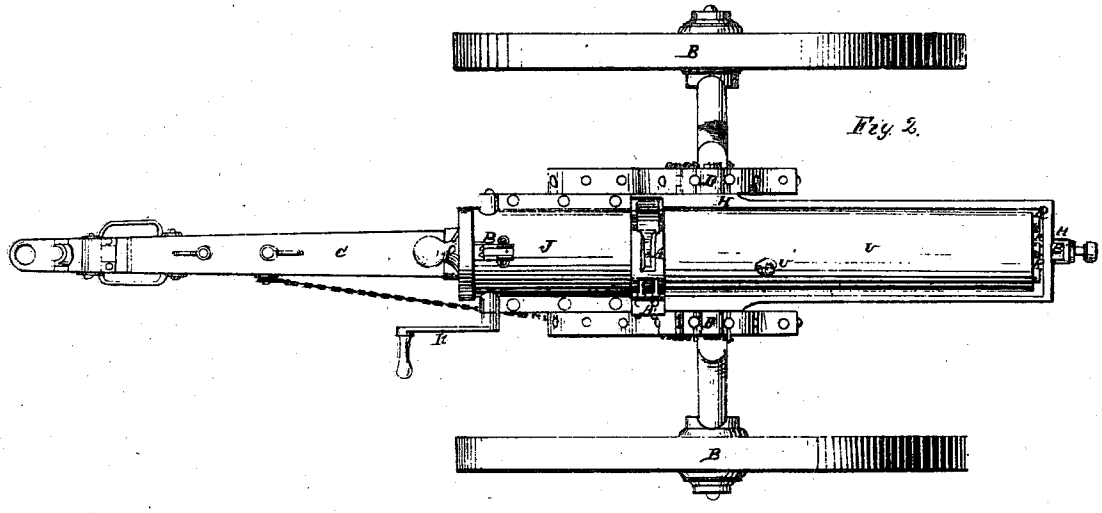

Inventor.

Richard J. Gatling.

R. J. Gatling. Sheet 2. 2 Sheets.

Machine Gun.

No. 47631. Patented May 9. 1865

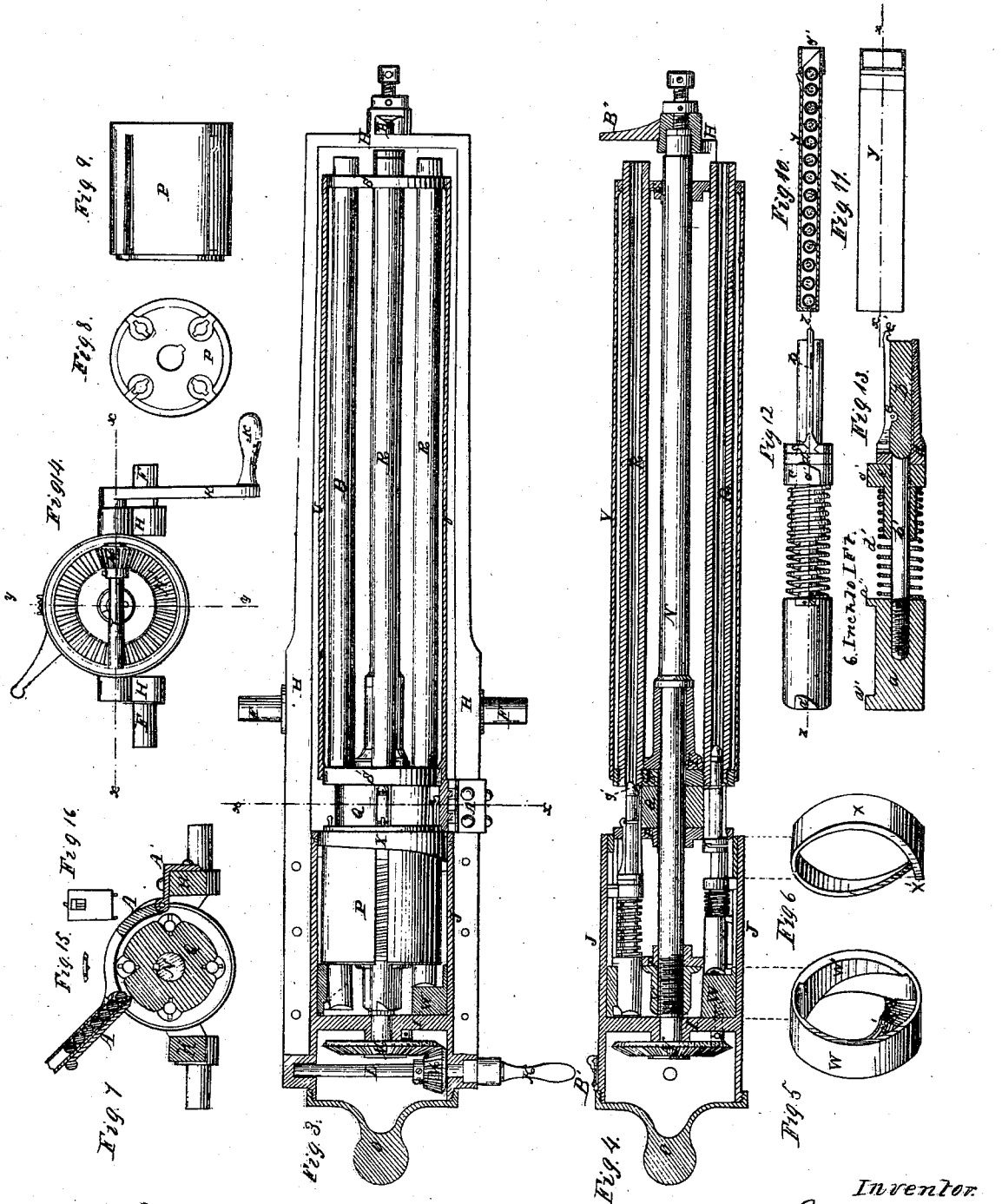

Witnesses.

Edward H. Knights

Alex A. C. Kanetz

Inventor.

Richard J. Gatling

UNITED STATES PATENT OFFICE.

RICHARD J. GATLING, OF INDIANAPOLIS, INDIANA.

IMPROVEMENT IN BATTERY-GUNS.

Specification forming part of Letters Patent No. 47,631, dated May 9, 1865.

To all whom it may concern:

Be it known that I, RICHARD JORDAN GATLING, of Indianapolis, county of Marion and State of Indiana, have made certain new and useful Improvements in Fire Arms, which I term a "Battery-Gun;" and I do hereby declare the following to be a full, clear, and exact description of the same, reference being had to the annexed drawings, making part of this specification, in which—

Figure 1 is a side elevation of the gun with its carriage and wheels. Fig. 2 is a plan of the same, or the mounted gun as viewed from above. Fig. 3 is a partial axial section on a horizontal plane, showing parts of the mechanism in plan. It is taken on the line *x x*, Fig. 14. Fig. 4 is a vertical longitudinal axial section, the locks and main shaft being shown in elevation. It is taken in the line *y y*, Fig. 14. Fig. 5 is a perpspective view of the ring furnished with inclined planes set spirally in relation to the axis of the gun and used for giving the longitudinal motions to the locks and breech-pins. Fig. 6 is a perspective view of the cocking-ring, which is used for drawing the lock-hammers back and liberating them to explode the cartridges when the gun is being operated. Fig. 7 is a transverse vertical section, at right angles to the axis of the gun, on the line *x x*, Fig. 3. Fig. 8 is an end view of the cylinder within which the locks are inclosed, and showing the perforations in the heads of the said cylinder, which form guides for the locks. Fig. 9 is an elevation of said cylinder. Fig. 10 is a longitudinal sectional view of one of the cartridge-boxes, from which the cartridges are fed into the gun, and is a section on line *x x*, Fig. 11, and shows the cartridges in place. Fig. 11 is a top view of the cartridge-box. Fig. 12 is an elevation of one of the locks. Fig. 13 is a longitudinal central section of one of the locks on the line *z z*, Fig. 12. Fig. 14 is a rear view of the gun with the cascabel and screw-cap, which closes the end of the chamber occupied by the rotating gears, removed. Figs. 15, 16 are views of the cap which is used to close a cavity in the cartridge-carrier when temporarily disused.

Similar letters of reference indicate corresponding parts in the several figures.

The main characteristic of my invention is a gun having a series of barrels with a carrier and lock-cylinder rigidly fastened to the main shaft and rotating simultaneously and continuously under the rotation of suitable gearing, the cartridges being fed into the cavities of the carrier, driven endwise into the barrels, then exploded, and the empty cartridge-cases withdrawn without any pause in the operation.

I will now proceed to describe in detail the peculiarities, the construction, and the operation of my invention.

The nature of my invention consists, first, in attaching the lock-cylinder in which the locks reciprocate longitudinally, the carrier in whose cavities the cartridges are deposited consecutively and the barrels rigidly to a revolving shaft, so that each lock shall at all times be in line with the cartridge-cavity in the carrier and with the barrel to which it appertains, and so that the operations of loading, firing, and extracting of the spent cartridge-cases may proceed under the impulse of the driving mechanism continuously, each barrel, cartridge-cavity, and lock forming a gun in itself, which in the course of its rotation is brought into contact with the requisite relational devices for manipulating and operating it and causing the various parts to perform their appropriate functions of receiving the cartridge from the feeder, thrusting it directly into the bore of the gun, cocking the hammer, exploding the cartridge, and finally extracting the spent cartridge-case, all of which several operations are effected without stopping the rotation of the barrels, locks, &c., when the gun is being operated; secondly, in the construction of the locks, each of which consists of a breech-pin united to a butt-piece and having a sleeve and lug moving upon it, which, under the impulse of a spring, acts as a hammer to drive the igniting-punch against the flange of the cartridge, the lock also affording attachment for the hook which slips over the flange of the cartridge and on the rearward motion of the lock withdraws the spent cartridge-case; thirdly, in the cam-ring which occupies a position at the rear of the lock-cylinder, and has within it two spiral or cam shaped faces, one of them operating upon the butt-end of the lock mechanisms in each case to drive the cartridge from the cavity in the carrier into the bore of the gun, and the other cam-face to act upon a lug on the said lock mechanism to withdraw the breech-pin, bringing with it the spent shell or case and retreating so far as to open the cavity in the carrier for the deposition of another car-

tridge; fourthly, in the cap or plug which is adapted to be laid over any such one of the cavities in the carrier as it may be desired shall not receive the cartridge, owing to some disarrangement of the parts or the bursting of the barrel, which may render that section of the gun inoperative.

The gun, speaking of it in general terms, is mounted upon its carriage, consisting of the wheels B B and the trail C, and is secured thereon by the usual cap, D, over the trunnions F, which project laterally from the frame H, by which the gun is supported and within which it revolves. The breech is raised and lowered by the elevating-screw E. The revolving portion, consisting of the lock-cylinder carrying the loading and firing mechanism, the cartridge-carrier, and the barrels, is attached to and supported by an axial or main shaft, N, whose forward end is journaled in the end piece of the frame H, and the rear end in a diaphragm or partition, I, within the casing J, which is supported by flanges on the frame H. The rotation of this shaft and the devices recited above, which are rigidly attached thereto, is accomplished by means of a hand-crank, K, whose shaft L carries a bevel-pinion, M, which gears into a bevel-wheel on the shaft N. (Shown clearly in Fig. 14.) The gearing is located in a chamber occupying the rear of the casing J, whose end is closed by a screw-cap, O, with an attached cascabel.

It has been stated that the cylinder P, which carries the loading and firing mechanism, the cartridge-carrier Q, and the barrels R are attached to the axial shaft N by a feather fitting into them and a groove in the shaft N, so as to revolve with it. The barrels are secured thereon by means of two disks or heads, S S′, which are fast on the shaft and in which they are secured, the rear disk, S′, being clamped between the sleeve T and the carrier Q, to be hereinafter described. The barrels R are secured in the said disks in any suitable way, and are shown as secured into the rear disk and passing through the forward disk, being fitted thereon, so as to be sufficiently tight to hold the contents of the casing U, which surrounds the barrels and holds water, plaster-of-paris, or other material to preserve the barrels from injurious expansion by excessive heating. The said fluid is inserted and withdrawn through the orifice U′, other provision, not necessary to describe, being made for more solid contents, should it be required.

The cartridge-carrier Q is fitted between the disk S and the cylinder P, and has a number of grooves in its periphery which are parallel with the axis of revolution, are in line with and agree in number with the barrels, which may be of any desired number. I have shown in my drawings but four, but the invention has no reference to specific number. These grooves are shown very clearly in Fig. 7, and are adapted as the carrier passes under the box containing the cartridges to receive each of them a cartridge to be thrust into the bore of the gun by the suitable mechanism, which will be described in detail presently, when the action will be more properly treated of under that general head of this specification which is devoted to describing the operation.

Immediately in the rear of the cartridge-carrier Q is a cylindrical chamber, P, likewise attached by feather or other suitable device to the axial-shaft N, and supported at the rear by the nut V, which screws upon the threaded portion of the shaft N. This cylinder is shown by a rear end elevation in Fig. 8 and side elevation at Fig. 9, as well as being shown in its place by the two longitudinal general sections, Figs. 3 and 4; but as it is a mere shell with longitudinal slots in its periphery and orifices in each end, the purpose of which slots and orifices will be presently explained, the sections, Figs. 3 and 4, only show the detached parts which are cut by the section, and do not give so correct an impression of its form and character as Figs. 8 and 9.

In the rear immediate neighborhood of the cylinder P, but not in connection therewith, is a cam-ring, W. (Shown in perspective in Fig. 5, and also in its place in the sections Figs. 3 and 4.) This cam-ring W abuts at its rear upon and is bolted to the diaphragm I, which is a part of and a partition in the stationary casing J. The exterior cylindrical portion of this stationary ring is embraced by the casing J, and the inside is provided with two cam-surfaces, W′ W″, which alternately advance and retract the loading mechanism, which will be presently described, and in connection therewith I shall take occasion to describe more explicitly the action of these cams to which I now merely refer.

Around the anterior portion of the cylinder P is another stationary ring, X, which I call the "cocking-ring," Fig. 6, whose forward edge is in the plane of revolution of the barrels, but its rear edge forms a spiral or cam surface, which impinges upon a lug on the lock-hammer, and withdraws it toward the rear until it reaches the end of the incline plane or cam-surface X′, when it drops off, and is thereby suddenly released to the influence of the spring and caused to strike the collar attached to the igniting-punch, as will be more fully explained in the next paragraph, which will explain in detail the construction of the moving parts, which load and explode the cartridge and withdraw the spent capsule or case.

The loading, firing, and cartridge-case-extracting device is shown in its place in Figs. 3 and 4, and is more particularly exhibited on a larger scale in Figs. 12 and 13, in the former of which it is shown in elevation and in the latter in section. It consists of a butt-piece, *a*, with lugs *a′ a″*, and united to the breech-pin *b* by the rounded shank *b′* of the latter, which forms a mandrel for the traversing of the sleeve *c* of the hammer, which has a longitudinal reciprocating motion upon it, and has a lug, *c′*, for a purpose to be explained. *d* is a collar and punch, the former of which

slides upon the mandrel *c*, and the latter—the punch—slides in a slot in the breech-pin *b*. *e* is the retractor, with a hook, *e'*, at its end, which slips over the flange of the cartridge as the breech-pin *b* drives the cartridge into the bore of the gun. The shank of the retractor is pinned to the breech-pin, and the butt of the retractor is also dovetailed into the collar *f*, which is a part of or fastened to the breech-pin *b*. *d'* is a spiral spring, which abuts against the forward end of the butt-piece *a* and against the shoulder of the sleeve-hammer *c*, so as to simultaneously act upon each of these faces. To avoid prolixity I shall defer an explanation of the various offices performed by the devices recited in this paragraph to that section of this specification which treats of the operation of the gun, as it naturally calls for lucid and consecutive statement in that place, and I desire to avoid needless repetition.

Figs. 10 and 11 show the cartridge-box into which the cartridges are packed for transportation, and out of which they are fed by their own gravity, one by one, into the cavities of the carrier Q as it revolves beneath them. These boxes are rectangular sheet-metal cases, adapted to the size of the cartridge, which, it is hardly necessary to say, are adapted to the bore of the gun. The sectional view, Fig. 10, shows the appearance of the cartridges Z in the case Y, and Y' shows the cap by which they are retained in the case during transportation. These views, Figs. 10 and 11, are on a larger scale than the view Fig. 7, but the latter gives the best view of the position of the cartridge-box Y as it is in place, viewed from the rear, showing a section on the line *x x*, Fig. 3, except that the flanged ends of the cartridges are shown.

The rest or holder A, which forms a cap over the cartridge-carrier Q, and retains the cartridges in their cavities until they are projected into the bore of the gun, is hinged to an elbow-piece, A', which is suitably fastened by bolts to the frame H of the gun. This holder, which is shown most effectively in Fig. 2, has an inclined ledge, in which the box of cartridges fits, so as to allow them to pass out consecutively into the cavities of the carrier. The slot in the cap of the rest allows them to be seen as they pass, while the curved under side of the cap retains them in their places.

The usual sights, B' B'', are placed over the breech and muzzle of the gun, and need no particular description, as they do not differ from those in ordinary use.

Fixed metallic cartridges are used in this gun, and are contained in cases, of which a number are kept on hand and refilled as occasion may require.

Metallic caps or covers, Figs. 15, 16, may be placed over such one or more of the cavities in the carrier as may be rendered necessary by the temporary disablement of the barrel or lock mechanism appertaining to the said cavity. This has the effect of shutting off the feed of the cartridges into one or more of the barrels which are incapacitated for service, and admits of the use of the remaining barrels without cessation other than to fit the cap over that cartridge-cavity withdrawn from service.

The gun can be so constructed as to revolve to the right or left or back and forth, as may be desired. This modification can be effected by adding to or changing the spiral cam-faces W' W'' and stationary cocking-ring X, so as to produce such results.

The operation of my gun is as follows: The gun, being mounted on the carriage or on a rotary platform or turn-table in such a manner as may best suit the purpose of defense or offense for which it is designed, is trained and sighted, and an attendant deposits a box of cartridges, with the uncovered end downward, upon the inclined ledge of the holder A. The gunner then seizes the handle of the crank K and revolves the pinion M, which rotates with it the axial or main shaft N.

While desiring to avoid repetition I must here repeat that the cylinder which contains the loading, cocking, and firing mechanism is fast to the shaft, as are also the cartridge-carriers Q and the barrels R, the latter through the intervention of the disks S S', into which the rear and forward ends, respectively, of the barrels are secured. I will now trace the consecutive motions and show the action of the various parts by which one cartridge is rammed to its place, exploded, and the empty shell retracted, and this will serve as a full description when it is stated that each barrel and its attendant devices are a complete gun in themselves and the series is but a repetition in duplicate, triplicate, or quadruplicate, as the case may be, of the operation of a single gun, this multiplication of parts constituting a compound gun with a number only limited by the question of convenience and utility, the specific number being indeterminate and not included within the scope of my claims.

To resume. The shaft and attendant machinery being revolved by the gearing, one of the hollows in the cartridge-carrier Q, passing under the open end of the cartridge-box, receives a cartridge and carries it over, the loading and firing plunger (Fig. 12) revolving with it until the rear end of the butt-piece *a* comes in contact with and commences to ascend the inclined plane or cam-face W' of the stationary ring W. As it ascends this inclined plane the breech-pin *b* is moved forward, thrusting the cartridge into the barrel, while the direct longitudinal motion of the loader is secured by the traversing of the lug *a''* in the longitudinal slot of the cylinder P, Fig. 9. As the plunger moves forward it carries the sleeve-hammer *c* with it until the lug *c'* on the hammer comes in contact with the rear or cam face of the stationary cocking-ring X, Fig. 6. By means of this ring the hammer is drawn toward the rear, compressing the spring *d'*, which in no wise interferes with the action of the plunger, which continues its forward motion until the rear of the butt-piece *a* arrives on the flat por-

tion of the came-face W′ to a point marked with a red star in Fig. 5, which indicates the firing-point, and is at or near the lowest point reached by the barrel in its rotation on the central axis. This endwise motion of the plunger has brought the forward end of the breech-piece close against the flange of the cartridge, which is firmly held in the chambered recess at the rear of the barrel, the exploding-punch, whose point protrudes a little beyond the end of the breech-pin, being forced back even with the same by the pressure upon the flange of the cartridge. This leaves a small space between the collar *d* of the punch and the flange *f* of the breech-pin, as may be seen in the lower one of the two flanges as represented in Fig. 4.

It is proper to mention at this point that at some period of the contact of the breech-pin *b* with the rear end of the cartridge the hook *e′* is slipped over the flange, and when the cartridge is rammed home occupies a recess in the edge of the bore.

To proceed with the description of the motion, after this apparent digression, in which the status of the different parts at the point of firing has been considered, we shall find that the lug *c′* of the hammer has been withdrawn rearwardly to the end of the cam on the cocking-ring X X′, Fig. 6, when by the continued revolution it is freed to the action of the spring *d′*, and the hammer *c* forcibly driven against the collar *d* of the exploding-punch, closing the space between *d* and *f*, and causing the point of the punch to indent the flange of the cartridge, which contains the fulminate, and explodes the charge. The two surfaces which come together with force in this percussive action consist of the annular collar and the flange of the breech-pin, and their extended surfaces receiving the blow are a safeguard against injury by battering or upsetting. The flat portion which terminates the came-face W′ is intended to hold the breech-piece firmly against the rear of the cartridge for a short space of time as a precaution in case of a cartridge hanging fire, and it will be observed that the rearward force of the discharge is received upon the end of the breech-pin and butt-piece, which I have called occasionally a "plunger" for the sake of convenience, and this is supported in the rear by the cam-surface of the ring W, which is firmly secured in the diaphragm I and casing J.

The plunger is of a determinate adjusted length, and occupies the whole space, when fired, between the flat portion of the cam-surface W and the rear of the barrel. The load having been discharged, the rear of the butt-piece, under the continued rotation, passes beyond the surface W′, and the lug *a′* is engaged by the pointed end of the cam-surface W″, which is also inside of the ring W. This incline has the effect of withdrawing the plunger, which in turn, by the engagement of the hook *e′* with the flange of the cartridge-case or spent capsule, retracts the latter from the bore and allows it to drop out of the cavity of the carrier Q toward the ground.

At the risk of tedius repetition I would here repeat that while the reciprocating motions of the parts are of course intermittent, as there are periods during which they pause for a fraction of a second, and cannot be strictly considered as incessant, yet the revolving motion of the barrels and attendant mechanism is absolutely continuous while the guns pass through the various stages of loading, firing, or retracting cartridge-cases and withdrawing the plunger to make room for another cartridge to occupy the groove in the carrier, thus bringing the succession of guns to the loading and firing points, and causing them to follow each other in a constantly-recurring cycle of operations, all the balls being discharged at one point and following in the wake of each other with precision unless by the training of the gun in a horizontal or other plane the sheet of balls is made to sweep a section of the circle within its range.

The gun described, which has four barrels, can be discharged at the rate of two hundred shots per minute, and guns on the same principle with a larger number of barrels can be made to discharge three hundred shots per minute.

Having thus fully, clearly, and exactly described the construction and operation of my invention, the following is what I claim as new therein and desire to secure by Letters Patent:

1. Making the series of barrels with their appropriate locks and cartridge-cavities to revolve on an axis, while the requisite motions to perform the loading directly into the rear end of the barrel, exploding, and the cartridge-case-retracting operations are obtained by the impingement of points on the revolving mechanism upon fixed spirals, cams, or inclined planes, these several operations being performed consecutively without stopping the rotation of the barrels when the gun is in operation.

2. The locks, Figs. 12 and 13, which revolve with the barrels and breech, and are operated by the cam-faces and springs during their revolution.

3. The cam-ring, Fig. 5, which is rigidly attached to the diaphragm of the stationary casing, and which by means of its cam-faces controls the longitudinal reciprocating motions of the locks by means of the lugs and the impingement of the butt-ends of the lock upon it, substantially as described.

4. The caps to be placed over the cavity in the carrier to shut off the feed, substantially as described.

RICHARD J. GATLING.

Witnesses:
JOHN CONDELL,
EDWARD H. DWIGHT.